DB25 LED BATTEN LIGHT | 40W

120° | AC 200-240V | PF≥0.9 | CRI≥80 | IP20

SPECIFICATIONS

Code	:	BB-DB25-1200-40W
Brand	:	BOX BRIGHT
Wattage	:	40W
Lumen (±5%)	:	3800lm
LED Ship	:	SMD
IP	:	20
Lifespan	:	50,000h
Installation	:	Surface mount / Suspension
Size(AxBxCmm)	:	1222 x 115 x 48.8
Material	:	Aluminium + PC
Color	:	Black / White
Dimable	:	N/A
CCT Adjustable	:	Yes 3-CCT: 3000K/4000K/5700K

CCT (K)

3000K | 4000K | 5000K | 5700K

STANDARD

CE RoHS

DIMENSION

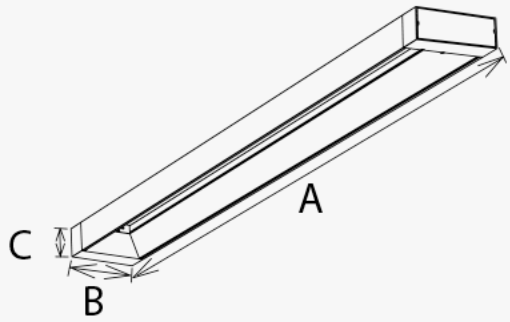

BOVIGA

Head Office 268/11 Soi Phutthabucha 39, Bangmod, Tungkru, 10140 Thailand

Tel : 02-408-4236 **Email** : sales.boviga@gmail.com **www.boviga.com**